ANBAUANLEITUNG

mounting instructions • instructions de montage • instrucciones de montaje • istruzioni di montaggio

BC.HTA.01.070.22000

beinhaltet • contains • contient • contiene • contiene

VMC.01.070.10000

VMC.01.070.11000

BC.HTA.00.402.20000

LOC.00.760.10000

SW-MOTECH®

Item number: **VMC.01.070.10000**	Revision: **01** · Date: **07 - 2026**

V-LOC Side Carrier left

~ 0.5 h.	EASY DIFFICULT

ENGLISH ·Thank you for choosing this premium product from SW-MOTECH. Visit our online shop for more information (e.g. model assignments). Required documents (e.g. national type approval) are available there for you to download.
Please read and understand all the instructions, safety information and warnings in these mounting instructions before mounting and using the product in order to avoid injury and damage. Keep these mounting instructions for reference.
This product was developed for vehicles in factory condition. Compatibility with original accessories or accessories from other manufacturers cannot be guaranteed.
These mounting instructions have been prepared to the best of our current knowledge. No legal claims relating to accuracy can be made. Errors and omissions excepted. We reserve the right to make technical and design changes. The copyright is held by SW-MOTECH.

SAFETY WARNING SYMBOL

⚠ **This warning symbol is used in these mounting instructions to warn of deadly dangers, injuries or other hazards. The words DANGER, WARNING or CAUTION are used as part of this warning symbol to convey important safety messages and information relating to the installation and use of this product. These words, together with the safety warning symbol, mean:**

⚠ **DANGER:** Indicates a hazardous situation which, if not avoided, will result in death or serious injury!

⚠ **WARNING:** Indicates a hazardous situation which, if not avoided, may result in death or serious injury!

⚠ **CAUTION:** Indicates a hazardous situation which, if not avoided, may result in minor or moderate injury!

⚠ ***NOTE:*** Important information, but not relating to a risk of death or injury (property damage only)!

GENERAL INFORMATION

⚠ **WARNING: Assembly and/or maintenance of this product requires advanced technical skill, appropriate tools, and a good understanding of tool usage and torque specifications. For your own safety, SW-MOTECH recommends having the assembly and/or maintenance carried out by a qualified and certified motorcycle workshop.**

⚠ **WARNING: If you do choose to assemble this product yourself, carefully and fully read the mounting instructions before assembly and use, and follow all instructions to avoid serious injury or death. Also observe all relevant information in the vehicle manual when mounting or using the product. IF YOU DO NOT UNDERSTAND ANY PART OF THESE MOUNTING INSTRUCTIONS OR NEED AN EXPLANATION AS TO A SPECIFIC INSTRUCTION, DO NOT ATTEMPT TO INSTALL THIS PRODUCT WITHOUT CONSULTING SW-MOTECH FOR ASSISTANCE!**

PREPARATION: Read the mounting instructions carefully and make sure that all parts on the parts list are available.

⚠ **CAUTION: Ensure that your vehicle is standing securely. Switch off the engine and remove the ignition key. Allow the engine/exhaust to cool down if necessary. Disconnect the battery when working on the electrical system. Only use proper tools and always wear safety goggles and gloves during assembly and maintenance. Have a second person help you with assembly and maintenance.**

ASSEMBLY: All parts and connections removed from the vehicle must be reinstalled according to the vehicle manufacturer's specifications or replaced with parts and hardware supplied by SW-MOTECH.

⚠ **WARNING: Secure all threads with a medium-strength liquid threadlocker, unless otherwise specified.**

⚠ **DANGER: Tightening torques not defined by SW-MOTECH must be obtained from the vehicle manufacturer or a certified motorbike workshop.**

FUNCTIONAL CHECK: After mounting the product, ensure that no moving parts are obstructed and that the function of the vehicle is not impeded. Cables and hoses must not rub against each other and/or be hindered in any way.

⚠ **WARNING: Carry out a comprehensive functionality check before you start to drive. Check the tightening torque of all connections and the tight fit of the product after the first 50 km and then at regular intervals. Mounted accessories can change the handling and stability of the vehicle.**

SW-MOTECH GmbH & Co. KG
Ernteweg 7-10
35282 Rauschenberg
Germany

info@sw-motech.com
www.sw-motech.com

The content translation is automated.
© SW-MOTECH GmbH & Co. KG

Errors and omissions excepted
Subject to technical and design changes.



Take note of the symbols and what they mean in the ASSEMBLY section. If the term OEM appears in the ASSEMBLY section, the vehicle manufacturer's specifications must be observed and applied.



If you have any questions, please don't hesitate to contact our Customer Service team or our distributors. You can find our telephone number and a list of our distributors in our online shop:
www.sw-motech.com



Use thread locker: Indicates that a thread must be coated with liquid thread locker. H (HIGH): high strength; M (MEDIUM): medium strength; L (LOW): low strength.



Tighten/note the tightening torque information: Indicates the tightening torque of a part specified by SW-MOTECH or the vehicle manufacturer (OEM).

The content translation is automated.
© SW-MOTECH GmbH & Co. KG

Errors and omissions excepted
Subject to technical and design changes.

2

1	2	3	4	5	6
					
VMC.01.070.901.01.11	M8 x 35; DIN 6912 SC.ST.08.035.02.6912.088	M8 x 40; DIN 6912 SC.ST.08.040.02.6912.088	ø 8,4; DIN 125 US.ST.084.02.125	Ø 20 / ø 8,4 / h 12 DB.ST.0200.0084.0120.48	Ø 20 / ø 8,4 / h 17 DB.ST.0200.0084.0170.48
1/1	**3**/3	**1**/1	**4**/4	**1**/1	**1**/1

3

7	8
	
VMC.00.864.900.05.02	M6 x 16; DIN 912 SC.ST.06.016.02.912.088
1/1	**4**/4

The content translation is automated.
© SW-MOTECH GmbH & Co. KG

Errors and omissions excepted
Subject to technical and design changes.

1

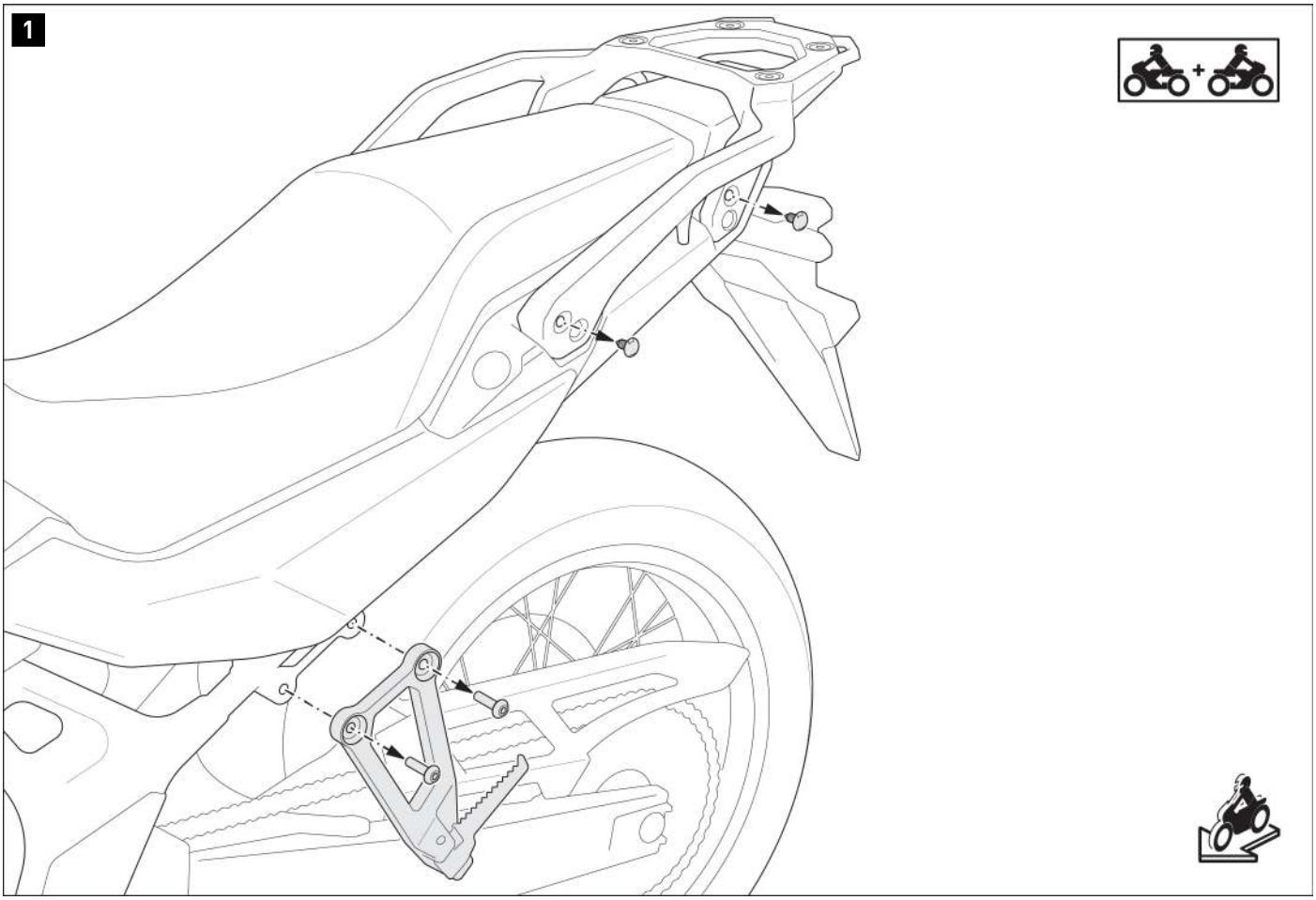

⚠ WARNING: Always wear eye and hand protection!
⚠ WARNING: Always use suitable tools!

Remove the indicated plastic plugs, screws and passenger footrest holder from the vehicle.



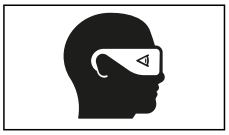

The content translation is automated.
© SW-MOTECH GmbH & Co. KG

Errors and omissions excepted
Subject to technical and design changes.

2

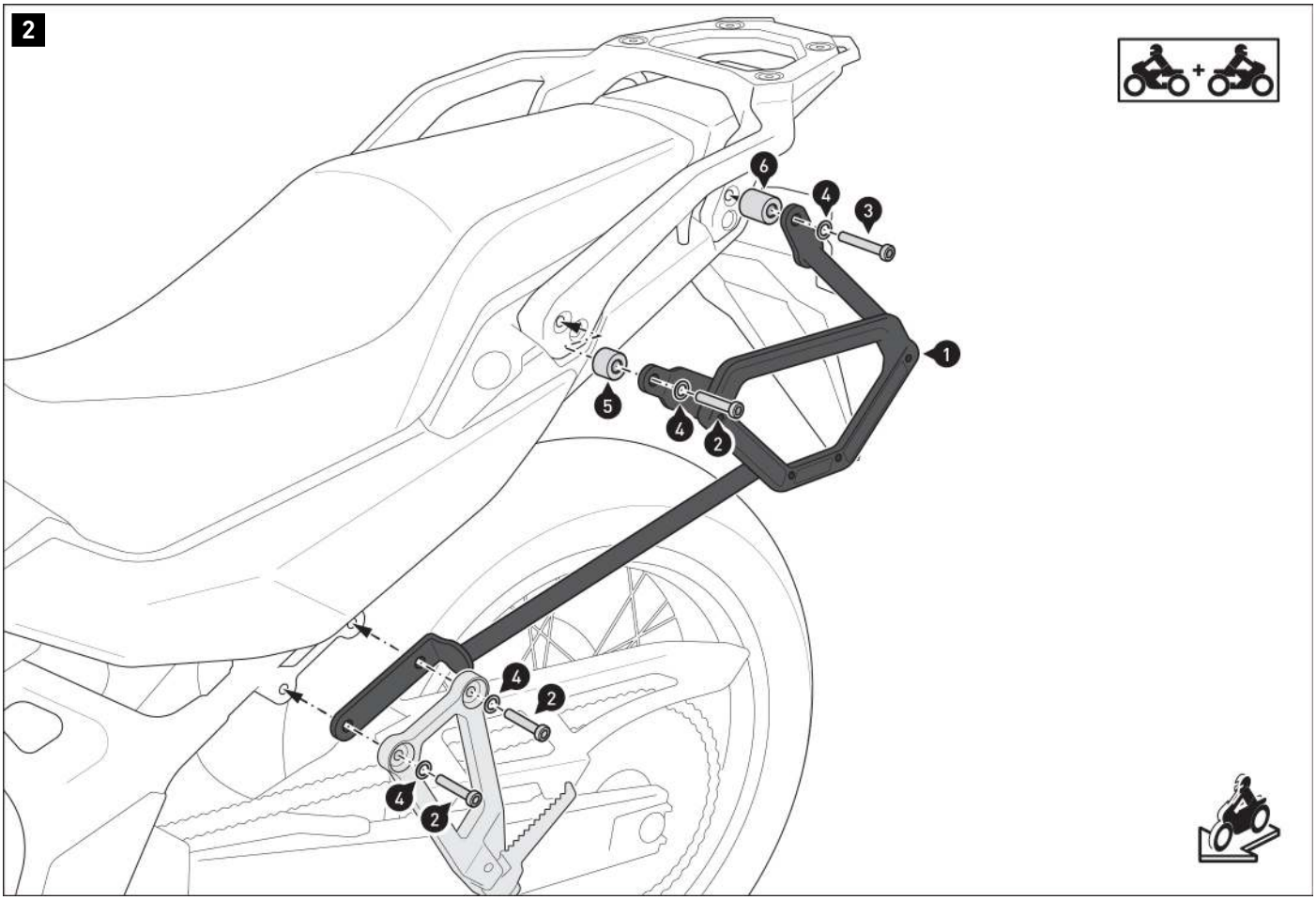

Screw the side carrier (1) together with the passenger footrest holder onto the vehicle.
⚠ WARNING: Use liquid threadlocker!
Tighten the screws (2) as well as screw (3) as specified in the mounting instructions.

1		×1
2		×3
	M	23 Nm
3		×1
	M	23 Nm
4		×4
5		×1
6		×1

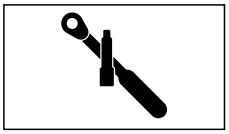
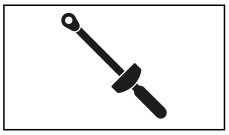
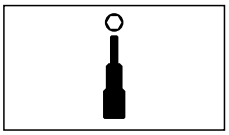


The content translation is automated.
© SW-MOTECH GmbH & Co. KG

Errors and omissions excepted
Subject to technical and design changes.

3

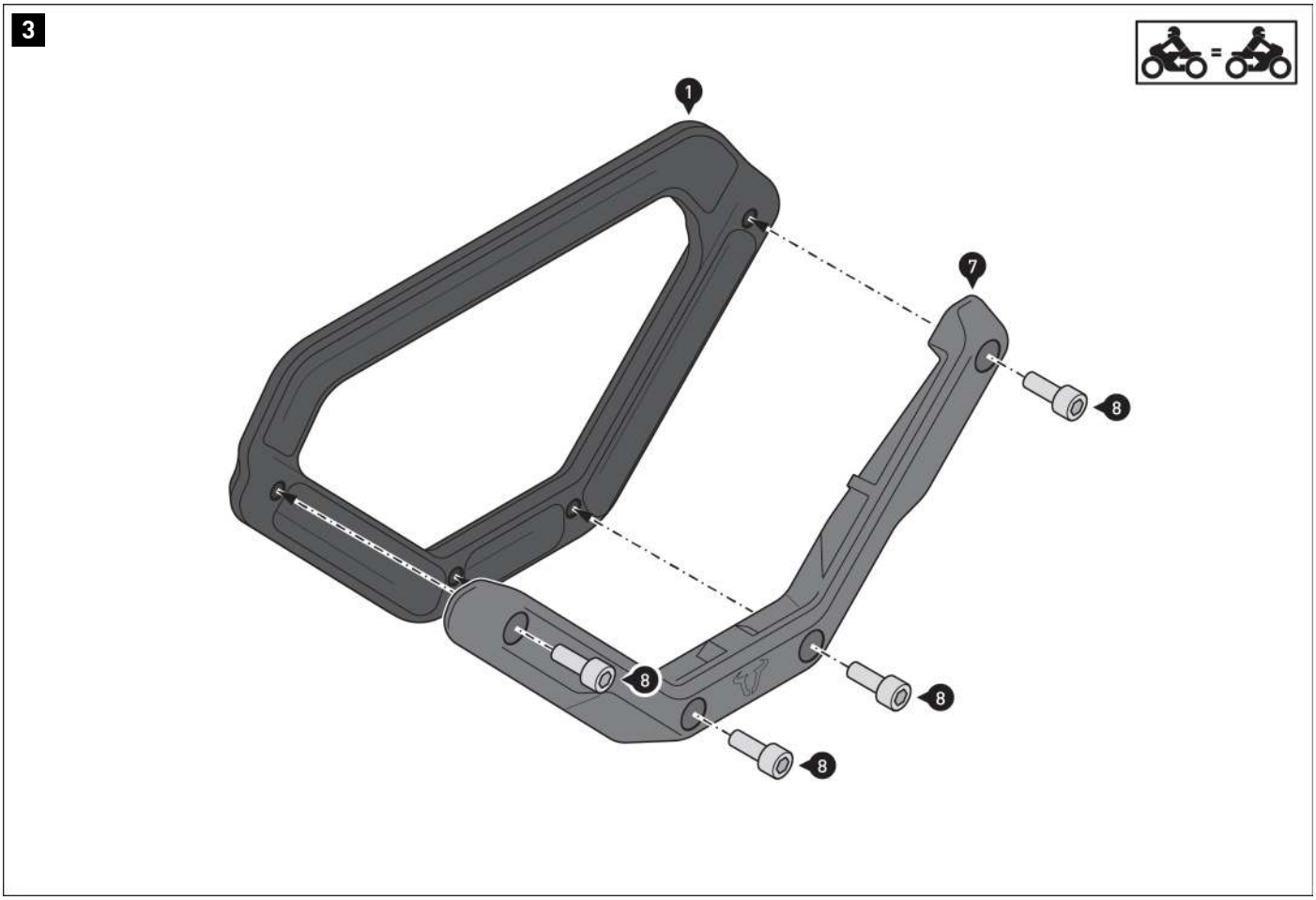

Screw the base (7) to the side carrier (1).
⚠ **WARNING: Use liquid threadlocker!**
Tighten the screws (8) as specified in the mounting instructions.





M	10 Nm

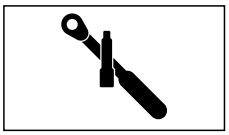

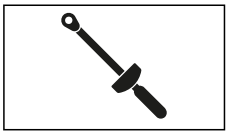

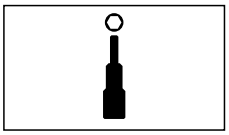



The content translation is automated.
© SW-MOTECH GmbH & Co. KG

Errors and omissions excepted
Subject to technical and design changes.

PRODUCT-SPECIFIC NOTES

⚠ DANGER: The maximum load indicated per side carrier/vehicle side includes the weight of the case/luggage and adapter kit! The maximum load capacity as specified by the vehicle manufacturer applies!

≤ 10 kg (≤ 22 lbs)	≤ 130 km/h (≤ 80 mph)

⚠ ***NOTE:*** *The side carrier was designed exclusively for use with SW-MOTECH adapter kits and luggage solutions.*

⚠ WARNING: Ensure that any luggage attached to the side carrier does NOT come into contact with the exhaust flow of a modified exhaust system! Risk of burns!

⚠ WARNING: The side carrier is NOT suitable for offroad use!

⚠ ***NOTICE:*** *Be sure to follow all country-specific regulations for the registration and operation of your vehicle, as well as any applicable TÜV regulations. Any parts requiring registration should be entered into your vehicle documents after installation by your inspection authority.*

The content translation is automated.
© SW-MOTECH GmbH & Co. KG

Errors and omissions excepted
Subject to technical and design changes.

Item number: **VMC.01.070.11000**	Revision: **01** · Date: **07 - 2026**

V-LOC Side Carrier right

~ 0.5 h.	EASY DIFFICULT

ENGLISH ·Thank you for choosing this premium product from SW-MOTECH. Visit our online shop for more information (e.g. model assignments). Required documents (e.g. national type approval) are available there for you to download.
Please read and understand all the instructions, safety information and warnings in these mounting instructions before mounting and using the product in order to avoid injury and damage. Keep these mounting instructions for reference.
This product was developed for vehicles in factory condition. Compatibility with original accessories or accessories from other manufacturers cannot be guaranteed.
These mounting instructions have been prepared to the best of our current knowledge. No legal claims relating to accuracy can be made. Errors and omissions excepted. We reserve the right to make technical and design changes. The copyright is held by SW-MOTECH.

SAFETY WARNING SYMBOL

⚠ **This warning symbol is used in these mounting instructions to warn of deadly dangers, injuries or other hazards. The words DANGER, WARNING or CAUTION are used as part of this warning symbol to convey important safety messages and information relating to the installation and use of this product. These words, together with the safety warning symbol, mean:**

⚠ **DANGER:** Indicates a hazardous situation which, if not avoided, will result in death or serious injury!

⚠ **WARNING:** Indicates a hazardous situation which, if not avoided, may result in death or serious injury!

⚠ **CAUTION:** Indicates a hazardous situation which, if not avoided, may result in minor or moderate injury!

⚠ ***NOTE:*** Important information, but not relating to a risk of death or injury (property damage only)!

GENERAL INFORMATION

⚠ **WARNING: Assembly and/or maintenance of this product requires advanced technical skill, appropriate tools, and a good understanding of tool usage and torque specifications. For your own safety, SW-MOTECH recommends having the assembly and/or maintenance carried out by a qualified and certified motorcycle workshop.**

⚠ **WARNING: If you do choose to assemble this product yourself, carefully and fully read the mounting instructions before assembly and use, and follow all instructions to avoid serious injury or death. Also observe all relevant information in the vehicle manual when mounting or using the product. IF YOU DO NOT UNDERSTAND ANY PART OF THESE MOUNTING INSTRUCTIONS OR NEED AN EXPLANATION AS TO A SPECIFIC INSTRUCTION, DO NOT ATTEMPT TO INSTALL THIS PRODUCT WITHOUT CONSULTING SW-MOTECH FOR ASSISTANCE!**

PREPARATION: Read the mounting instructions carefully and make sure that all parts on the parts list are available.

⚠ **CAUTION: Ensure that your vehicle is standing securely. Switch off the engine and remove the ignition key. Allow the engine/exhaust to cool down if necessary. Disconnect the battery when working on the electrical system. Only use proper tools and always wear safety goggles and gloves during assembly and maintenance. Have a second person help you with assembly and maintenance.**

ASSEMBLY: All parts and connections removed from the vehicle must be reinstalled according to the vehicle manufacturer's specifications or replaced with parts and hardware supplied by SW-MOTECH.

⚠ **WARNING: Secure all threads with a medium-strength liquid threadlocker, unless otherwise specified.**

⚠ **DANGER: Tightening torques not defined by SW-MOTECH must be obtained from the vehicle manufacturer or a certified motorbike workshop.**

FUNCTIONAL CHECK: After mounting the product, ensure that no moving parts are obstructed and that the function of the vehicle is not impeded. Cables and hoses must not rub against each other and/or be hindered in any way.

⚠ **WARNING: Carry out a comprehensive functionality check before you start to drive. Check the tightening torque of all connections and the tight fit of the product after the first 50 km and then at regular intervals. Mounted accessories can change the handling and stability of the vehicle.**

SW-MOTECH®

SW-MOTECH GmbH & Co. KG
Ernteweg 7-10
35282 Rauschenberg
Germany

info@sw-motech.com
www.sw-motech.com

The content translation is automated.
© SW-MOTECH GmbH & Co. KG

Errors and omissions excepted
Subject to technical and design changes.



Take note of the symbols and what they mean in the ASSEMBLY section. If the term OEM appears in the ASSEMBLY section, the vehicle manufacturer's specifications must be observed and applied.



If you have any questions, please don't hesitate to contact our Customer Service team or our distributors. You can find our telephone number and a list of our distributors in our online shop:
www.sw-motech.com



Use thread locker: Indicates that a thread must be coated with liquid thread locker. H (HIGH): high strength; M (MEDIUM): medium strength; L (LOW): low strength.



Tighten/note the tightening torque information: Indicates the tightening torque of a part specified by SW-MOTECH or the vehicle manufacturer (OEM).

The content translation is automated.
© SW-MOTECH GmbH & Co. KG

Errors and omissions excepted
Subject to technical and design changes.

2

1	2	3	4	5	6
					
VMC.01.070.902.01.11	M8 x 35; DIN 6912 SC.ST.08.035.02.6912.088	M8 x 40; DIN 6912 SC.ST.08.040.02.6912.088	ø 8,4; DIN 125 US.ST.084.02.125	Ø 20 / ø 8,4 / h 12 DB.ST.0200.0084.0120.48	Ø 20 / ø 8,4 / h 17 DB.ST.0200.0084.0170.48
1/1	**3**/3	**1**/1	**4**/4	**1**/1	**1**/1

3

7	8
	
VMC.00.864.900.05.02	M6 x 16; DIN 912 SC.ST.06.016.02.912.088
1/1	**4**/4

The content translation is automated.
© SW-MOTECH GmbH & Co. KG

Errors and omissions excepted
Subject to technical and design changes.

1

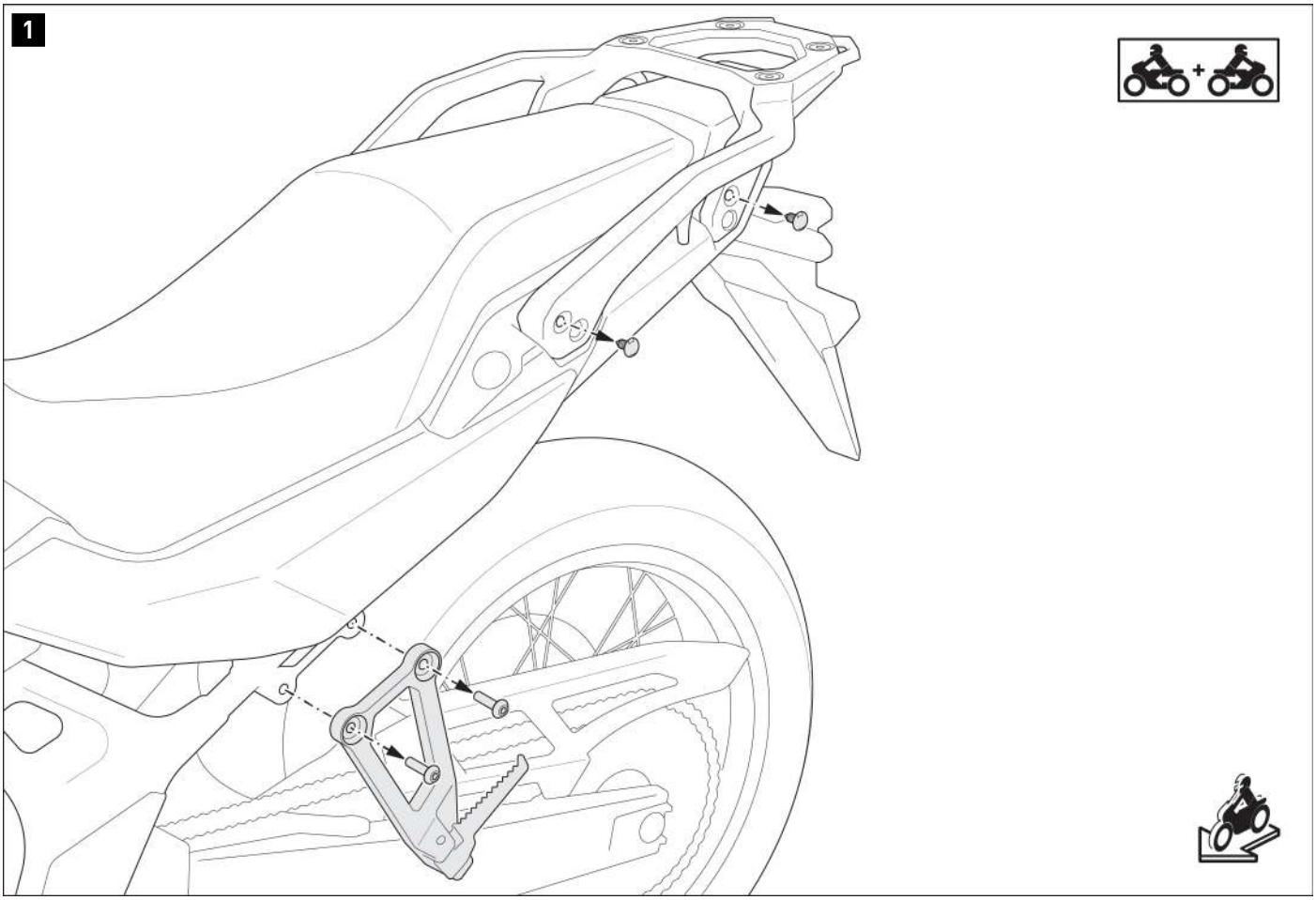

⚠ WARNING: Always wear eye and hand protection!
⚠ WARNING: Always use suitable tools!



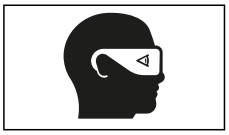

⚠ ***NOTE:*** *The instructions illustrate how to mount the* ***left*** *side carrier. Repeat the same steps for the* ***right*** *side carrier.*

Remove the indicated plastic plugs, screws and passenger footrest holder from the vehicle.

The content translation is automated.
© SW-MOTECH GmbH & Co. KG

Errors and omissions excepted
Subject to technical and design changes.

2

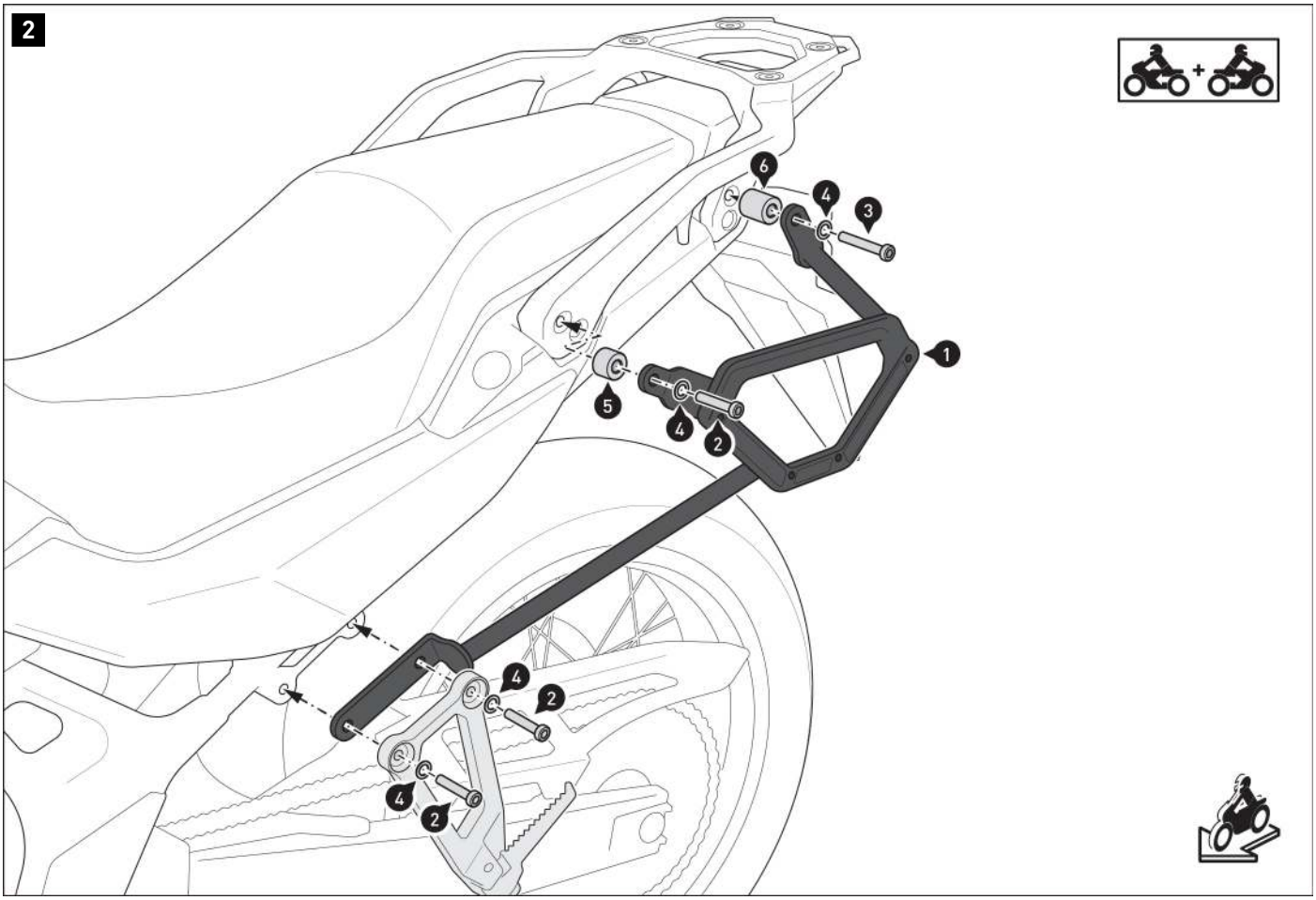

Screw the side carrier (1) together with the passenger footrest holder onto the vehicle.
⚠ WARNING: Use liquid threadlocker!
Tighten the screws (2) as well as screw (3) as specified in the mounting instructions.













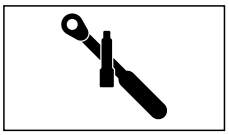

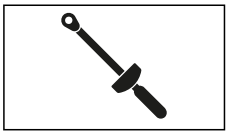

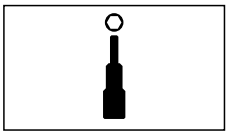



The content translation is automated.
© SW-MOTECH GmbH & Co. KG

Errors and omissions excepted
Subject to technical and design changes.

3

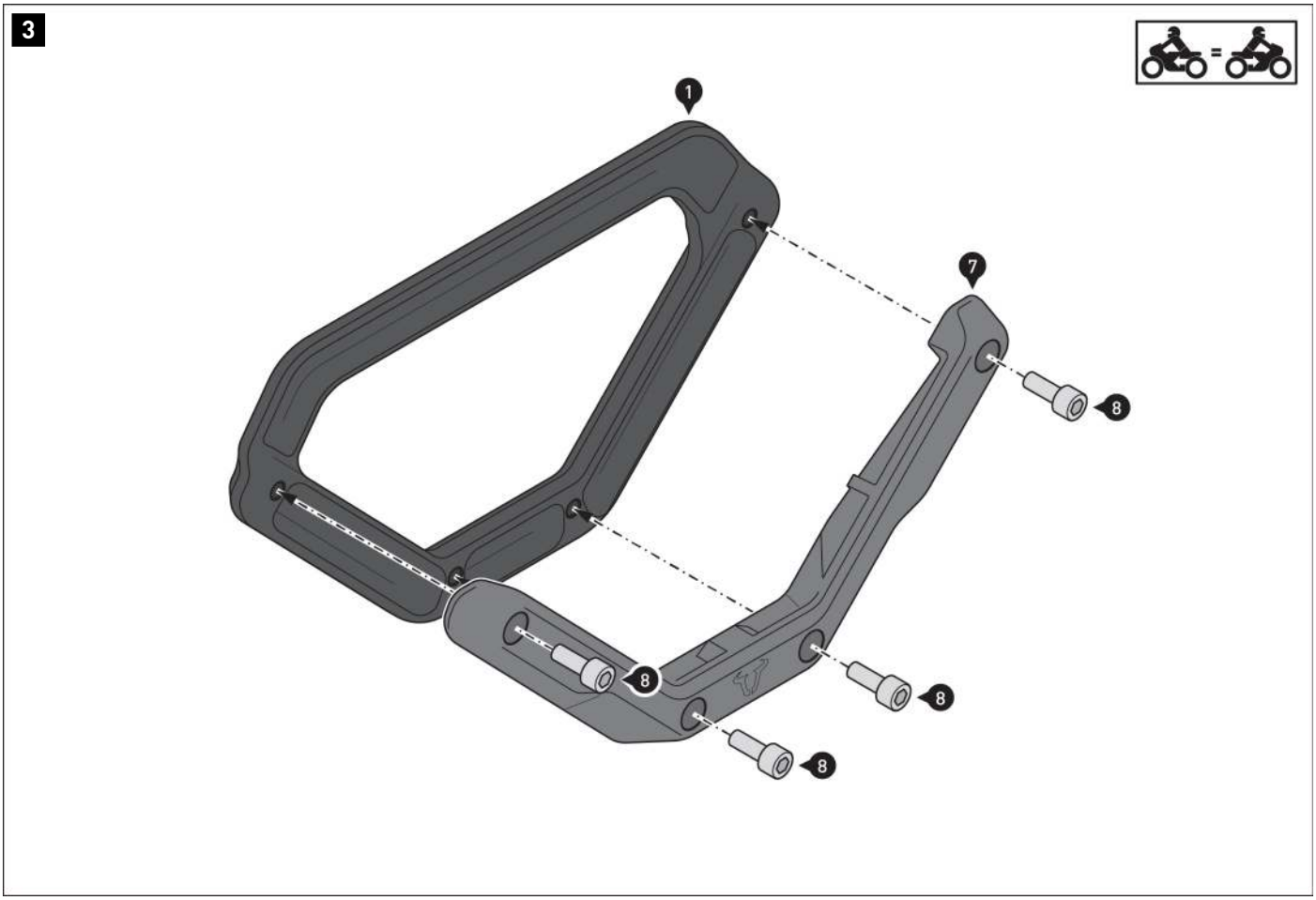

Screw the base (7) to the side carrier (1).
⚠ **WARNING: Use liquid threadlocker!**
Tighten the screws (8) as specified in the mounting instructions.





M	10 Nm

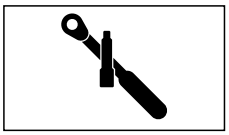

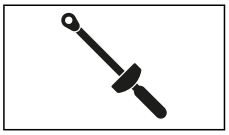

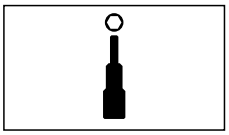



The content translation is automated.
© SW-MOTECH GmbH & Co. KG

Errors and omissions excepted
Subject to technical and design changes.

PRODUCT-SPECIFIC NOTES

⚠ DANGER: The maximum load indicated per side carrier/vehicle side includes the weight of the case/luggage and adapter kit! The maximum load capacity as specified by the vehicle manufacturer applies!

≤ 10 kg (≤ 22 lbs)	≤ 130 km/h (≤ 80 mph)

⚠ ***NOTE:*** *The side carrier was designed exclusively for use with SW-MOTECH adapter kits and luggage solutions.*

⚠ WARNING: Ensure that any luggage attached to the side carrier does NOT come into contact with the exhaust flow of a modified exhaust system! Risk of burns!

⚠ WARNING: The side carrier is NOT suitable for offroad use!

⚠ ***NOTICE:*** *Be sure to follow all country-specific regulations for the registration and operation of your vehicle, as well as any applicable TÜV regulations. Any parts requiring registration should be entered into your vehicle documents after installation by your inspection authority.*

The content translation is automated.
© SW-MOTECH GmbH & Co. KG

Errors and omissions excepted
Subject to technical and design changes.

Item number: **BC.HTA.00.402.20000**	Revision: **01** · Date: **03 - 2026**

Legend Gear Side Bag 16L

~ 0.25 h.	**EASY** **DIFFICULT**

ENGLISH ·Thank you for choosing this premium product from SW-MOTECH. Visit our online shop for more information (e.g. model assignments). Required documents (e.g. national type approval) are available there for you to download.
Please read and understand all the instructions, safety information and warnings in these mounting instructions before mounting and using the product in order to avoid injury and damage. Keep these mounting instructions for reference.
This product was developed for vehicles in factory condition. Compatibility with original accessories or accessories from other manufacturers cannot be guaranteed.
These mounting instructions have been prepared to the best of our current knowledge. No legal claims relating to accuracy can be made. Errors and omissions excepted. We reserve the right to make technical and design changes. The copyright is held by SW-MOTECH.

SAFETY WARNING SYMBOL

⚠ **This warning symbol is used in these mounting instructions to warn of deadly dangers, injuries or other hazards. The words DANGER, WARNING or CAUTION are used as part of this warning symbol to convey important safety messages and information relating to the installation and use of this product. These words, together with the safety warning symbol, mean:**

⚠ **DANGER:** Indicates a hazardous situation which, if not avoided, will result in death or serious injury!

⚠ **WARNING:** Indicates a hazardous situation which, if not avoided, may result in death or serious injury!

⚠ **CAUTION:** Indicates a hazardous situation which, if not avoided, may result in minor or moderate injury!

⚠ ***NOTE:*** Important information, but not relating to a risk of death or injury (property damage only)!

GENERAL INFORMATION

⚠ **WARNING: Assembly and/or maintenance of this product requires advanced technical skill, appropriate tools, and a good understanding of tool usage and torque specifications. For your own safety, SW-MOTECH recommends having the assembly and/or maintenance carried out by a qualified and certified motorcycle workshop.**

⚠ **WARNING: If you do choose to assemble this product yourself, carefully and fully read the mounting instructions before assembly and use, and follow all instructions to avoid serious injury or death. Also observe all relevant information in the vehicle manual when mounting or using the product. IF YOU DO NOT UNDERSTAND ANY PART OF THESE MOUNTING INSTRUCTIONS OR NEED AN EXPLANATION AS TO A SPECIFIC INSTRUCTION, DO NOT ATTEMPT TO INSTALL THIS PRODUCT WITHOUT CONSULTING SW-MOTECH FOR ASSISTANCE!**

PREPARATION: Read the mounting instructions carefully and make sure that all parts on the parts list are available.

⚠ **CAUTION: Ensure that your vehicle is standing securely. Switch off the engine and remove the ignition key. Allow the engine/exhaust to cool down if necessary. Disconnect the battery when working on the electrical system. Only use proper tools and always wear safety goggles and gloves during assembly and maintenance. Have a second person help you with assembly and maintenance.**

ASSEMBLY: All parts and connections removed from the vehicle must be reinstalled according to the vehicle manufacturer's specifications or replaced with parts and hardware supplied by SW-MOTECH.

⚠ **WARNING: Secure all threads with a medium-strength liquid threadlocker, unless otherwise specified.**

⚠ **DANGER: Tightening torques not defined by SW-MOTECH must be obtained from the vehicle manufacturer or a certified motorbike workshop.**

FUNCTIONAL CHECK: After mounting the product, ensure that no moving parts are obstructed and that the function of the vehicle is not impeded. Cables and hoses must not rub against each other and/or be hindered in any way.

⚠ **WARNING: Carry out a comprehensive functionality check before you start to drive. Check the tightening torque of all connections and the tight fit of the product after the first 50 km and then at regular intervals. Mounted accessories can change the handling and stability of the vehicle.**

SW-MOTECH GmbH & Co. KG
Ernteweg 7-10
35282 Rauschenberg
Germany

info@sw-motech.com
www.sw-motech.com

The content translation is automated.
© SW-MOTECH GmbH & Co. KG

Errors and omissions excepted
Subject to technical and design changes.



Take note of the symbols and what they mean in the ASSEMBLY section. If the term OEM appears in the ASSEMBLY section, the vehicle manufacturer's specifications must be observed and applied.



If you have any questions, please don't hesitate to contact our Customer Service team or our distributors. You can find our telephone number and a list of our distributors in our online shop:
www.sw-motech.com

The content translation is automated.
© SW-MOTECH GmbH & Co. KG

Errors and omissions excepted
Subject to technical and design changes.

1

1



BC.HTA.00.402.20000

1/1

3

2



BC.ZUB.00.161.001.00

1/1

The content translation is automated.
© SW-MOTECH GmbH & Co. KG

Errors and omissions excepted
Subject to technical and design changes.

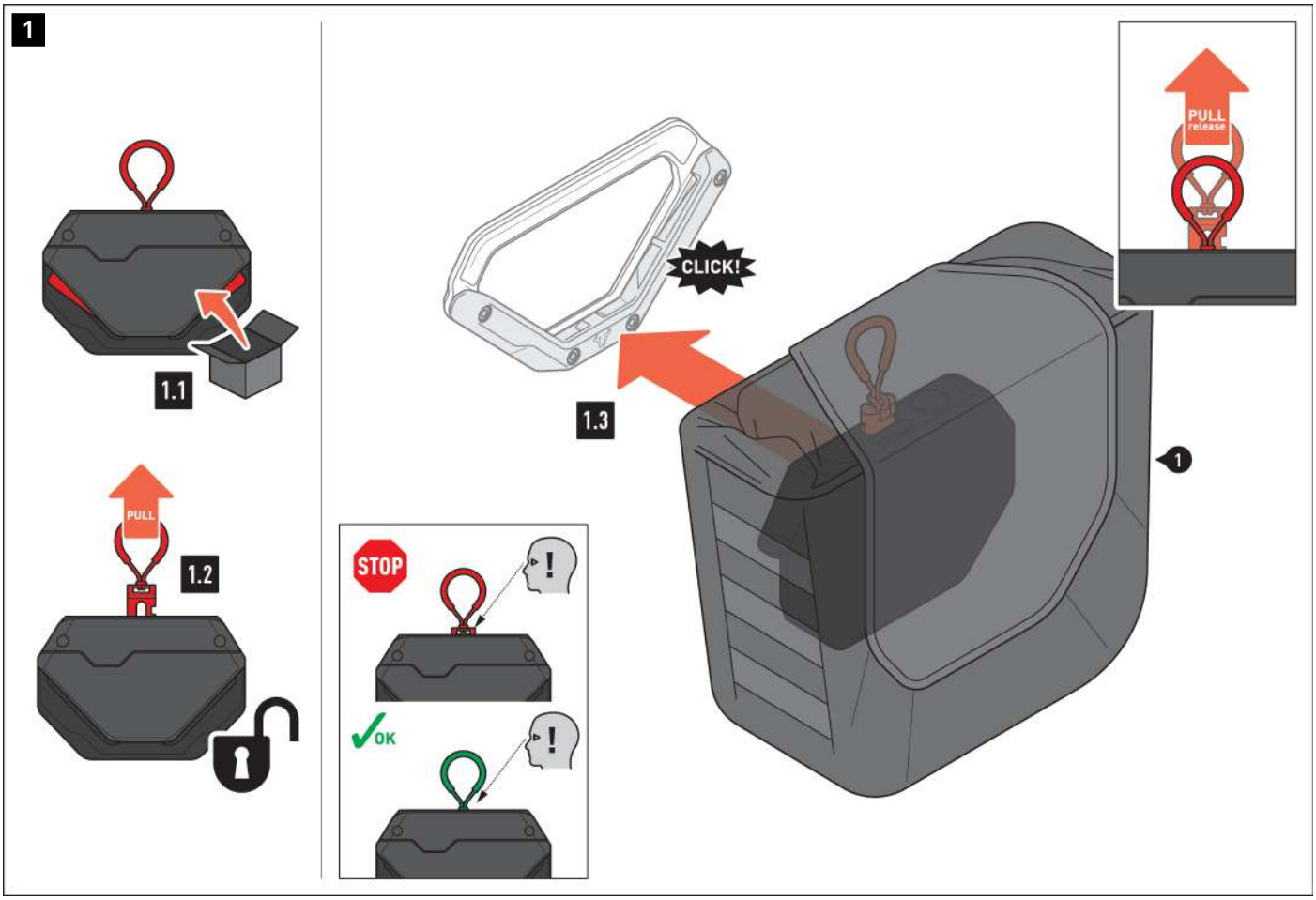

Attaching the side bag to the V-LOC side carrier

1.1 - The V-LOC connector for the (1) side bag is delivered in the locked position.

1.2 - Before using the (1) side bag for the first time, pull the release strap until the mechanism clicks into place.
The (1) side bag is now ready for use.

1.3 - Gently press the V-LOC connector for the (1) side bag onto your V-LOC side carrier. The locking mechanism triggers automatically.
Check that the (1) side bag is securely attached to the V-LOC side carrier.
⚠ WARNING: Ensure that the release slide is FULLY inside the V-LOC connector housing (see the detailed illustration on the left)! Risk of loss!
If the release slide protrudes, the V-LOC connector must be cleaned (see the **"Maintenance of the V-LOC connector"** section).

Pull the release strap to detach the (1) side bag from the V-LOC side carrier.
The (1) side bag can then be removed.



© SW-MOTECH GmbH & Co. KG

Errors and omissions excepted
Subject to technical and design changes.

2

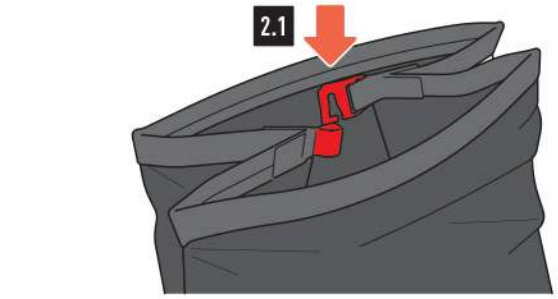

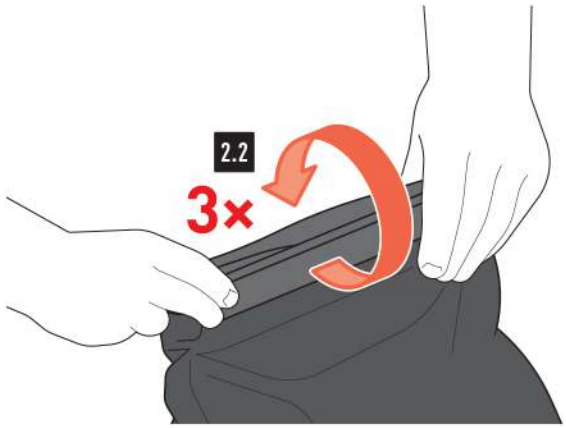

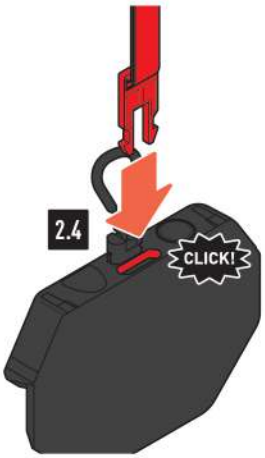

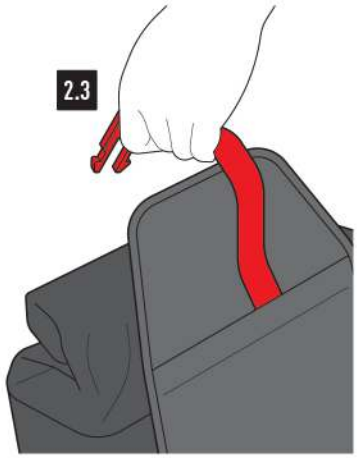

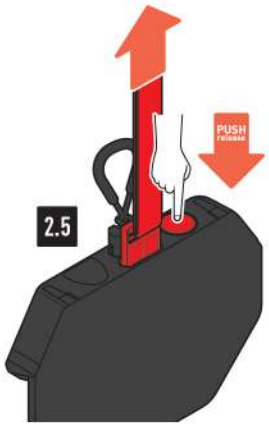

Closing the side bag

2.1 - Connect the hook-and-loop parts of the binding.

2.2 - Connect the Velcro strips for the binding; then roll up the binding **three times**.

2.3 - Guide the lid's fastening strap over the (1) side bag ...

2.4 - ... and insert the buckle plug into the opening for the V-LOC connector. Tighten the fastening strap securely to prevent the excess length from fluttering.

2.5 - Press the button to release the buckle.

The content translation is automated.
© SW-MOTECH GmbH & Co. KG

Errors and omissions excepted
Subject to technical and design changes.

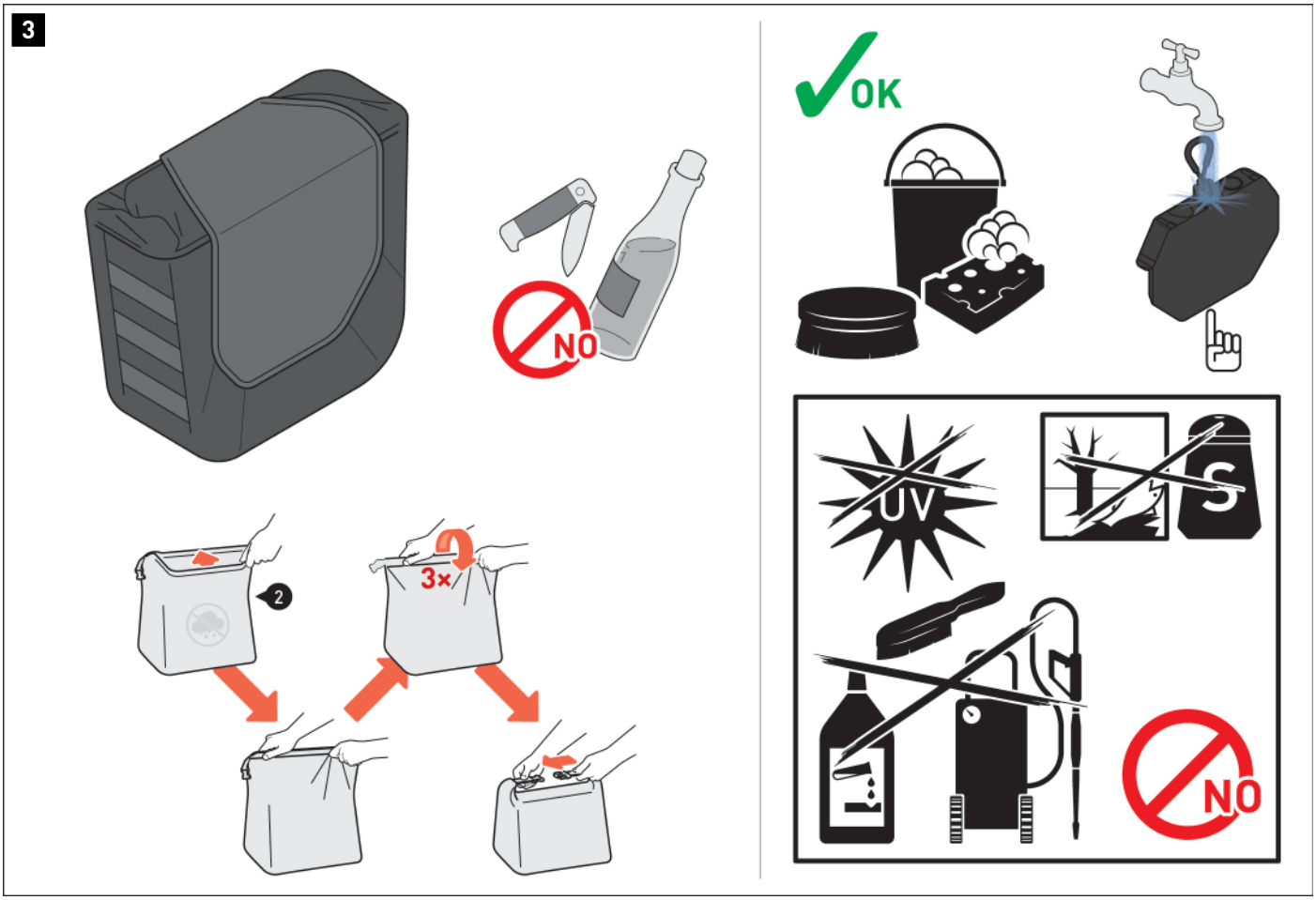

Loading the side bag

⚠ **WARNING: Ensure the load is evenly distributed! Make sure that the load will not slip while driving!**

⚠ ***NOTE:*** *Make sure that you never store sharp-edged, pointed, or similar objects that could cause injury to persons or damage to the vehicle/side bag!*

⚠ ***NOTE:*** *Only attach designated SW-MOTECH products to the* ***MOLLE system****!*

Use the (2) waterproof inner bag to further protect your luggage from moisture.
Close the binding for the (2) waterproof inner bag and roll it up **three times**.
Fasten the (2) waterproof inner bag with the buckles.
Attach the (2) waterproof inner bag to the three Velcro strips on the inside of the (1) side bag.

Allow the (1) side bag and (2) waterproof inner bag to dry separately to avoid mildew stains.



Maintenance of the side bag

For cleaning, use **ONLY** a soft textile brush, cloth or sponge and warm soapy water! Then rinse with clean water. Do **NOT** use harsh cleaning agents, rough cleaning utensils, or a high-pressure cleaner! Be sure to clean the side bag after winter rides to avoid damage caused by salt.
⚠ ***NOTE:*** *Surface materials may subject to color changes (fading) with prolonged and intense exposure to sunlight and environmental influences (e.g., smog, acid rain, etc.)! SW-MOTECH accepts no liability for this!*

Maintenance of the V-LOC connector

If the V-LOC connector becomes dirty, rinse it thoroughly with clean water. Trigger the mechanism several times (press the button at the bottom of the housing). After drying, check the functionality of the V-LOC connector.

The content translation is automated.
© SW-MOTECH GmbH & Co. KG

Errors and omissions excepted
Subject to technical and design changes.

PRODUCT-SPECIFIC NOTES

⚠ ***NOTE:*** *Observe the country-specific regulations for the registration/operation of your vehicle and any applicable TÜV regulations. Have any parts requiring registration entered in the vehicle documents by your inspection centre after they have been installed.*

⚠ **DANGER: This product is NOT suitable for off-road use!**

⚠ **DANGER: Ensure that the product is properly positioned before departure and at every rest stop (every 200 km)!**

⚠ **DANGER: The vehicle's driving/braking behavior will change noticeably once this product is attached!**

⚠ **DANGER: Lean angle and ground clearance may be restricted by this product!**

⚠ **DANGER: The maximum payload of the vehicle as defined by the vehicle manufacturer, as well as the maximum permissible payload of the SW-MOTECH side carrier, must NOT be exceeded, taking into account the product's own weight!**
Weight of **Legend Gear 11L side bag: 1.8 kg** (4.0 lbs)
Weight of **Legend Gear 16L side bag: 2.1 kg** (4.7 lbs)
Weight of **WP 11L side bag: 2.1 kg** (4.7 lbs)
Weight of **WP 16L side bag: 2.3 kg** (5.0 lbs)



The content translation is automated.
© SW-MOTECH GmbH & Co. KG

Errors and omissions excepted
Subject to technical and design changes.

Item number: **LOC.00.760.10000**	Revision: **00** · Date: **05 - 2026**

Lock set 2/2

~ 0.5 h.	EASY DIFFICULT

ENGLISH ·Thank you for choosing this premium product from SW-MOTECH. Visit our online shop for more information (e.g. model assignments). Required documents (e.g. national type approval) are available there for you to download.
Please read and understand all the instructions, safety information and warnings in these mounting instructions before mounting and using the product in order to avoid injury and damage. Keep these mounting instructions for reference.
This product was developed for vehicles in factory condition. Compatibility with original accessories or accessories from other manufacturers cannot be guaranteed.
These mounting instructions have been prepared to the best of our current knowledge. No legal claims relating to accuracy can be made. Errors and omissions excepted. We reserve the right to make technical and design changes. The copyright is held by SW-MOTECH.

SAFETY WARNING SYMBOL

⚠ **This warning symbol is used in these mounting instructions to warn of deadly dangers, injuries or other hazards. The words DANGER, WARNING or CAUTION are used as part of this warning symbol to convey important safety messages and information relating to the installation and use of this product. These words, together with the safety warning symbol, mean:**

⚠ **DANGER:** Indicates a hazardous situation which, if not avoided, will result in death or serious injury!

⚠ **WARNING:** Indicates a hazardous situation which, if not avoided, may result in death or serious injury!

⚠ **CAUTION:** Indicates a hazardous situation which, if not avoided, may result in minor or moderate injury!

⚠ ***NOTE:*** Important information, but not relating to a risk of death or injury (property damage only)!

GENERAL INFORMATION

⚠ **WARNING: Assembly and/or maintenance of this product requires advanced technical skill, appropriate tools, and a good understanding of tool usage and torque specifications. For your own safety, SW-MOTECH recommends having the assembly and/or maintenance carried out by a qualified and certified motorcycle workshop.**

⚠ **WARNING: If you do choose to assemble this product yourself, carefully and fully read the mounting instructions before assembly and use, and follow all instructions to avoid serious injury or death. Also observe all relevant information in the vehicle manual when mounting or using the product. IF YOU DO NOT UNDERSTAND ANY PART OF THESE MOUNTING INSTRUCTIONS OR NEED AN EXPLANATION AS TO A SPECIFIC INSTRUCTION, DO NOT ATTEMPT TO INSTALL THIS PRODUCT WITHOUT CONSULTING SW-MOTECH FOR ASSISTANCE!**

PREPARATION: Read the mounting instructions carefully and make sure that all parts on the parts list are available.

⚠ **CAUTION: Ensure that your vehicle is standing securely. Switch off the engine and remove the ignition key. Allow the engine/exhaust to cool down if necessary. Disconnect the battery when working on the electrical system. Only use proper tools and always wear safety goggles and gloves during assembly and maintenance. Have a second person help you with assembly and maintenance.**

ASSEMBLY: All parts and connections removed from the vehicle must be reinstalled according to the vehicle manufacturer's specifications or replaced with parts and hardware supplied by SW-MOTECH.

⚠ **WARNING: Secure all threads with a medium-strength liquid threadlocker, unless otherwise specified.**

⚠ **DANGER: Tightening torques not defined by SW-MOTECH must be obtained from the vehicle manufacturer or a certified motorbike workshop.**

FUNCTIONAL CHECK: After mounting the product, ensure that no moving parts are obstructed and that the function of the vehicle is not impeded. Cables and hoses must not rub against each other and/or be hindered in any way.

⚠ **WARNING: Carry out a comprehensive functionality check before you start to drive. Check the tightening torque of all connections and the tight fit of the product after the first 50 km and then at regular intervals. Mounted accessories can change the handling and stability of the vehicle.**

SW-MOTECH GmbH & Co. KG
Ernteweg 7-10
35282 Rauschenberg
Germany

info@sw-motech.com
www.sw-motech.com

The content translation is automated.
© SW-MOTECH GmbH & Co. KG

Errors and omissions excepted
Subject to technical and design changes.



Take note of the symbols and what they mean in the ASSEMBLY section. If the term OEM appears in the ASSEMBLY section, the vehicle manufacturer's specifications must be observed and applied.



If you have any questions, please don't hesitate to contact our Customer Service team or our distributors. You can find our telephone number and a list of our distributors in our online shop:
www.sw-motech.com

The content translation is automated.
© SW-MOTECH GmbH & Co. KG

Errors and omissions excepted
Subject to technical and design changes.

2

1



VMC.00.864.500.04

2/2

2



QLS.00.046.006

1/1

The content translation is automated.
© SW-MOTECH GmbH & Co. KG

Errors and omissions excepted
Subject to technical and design changes.

1

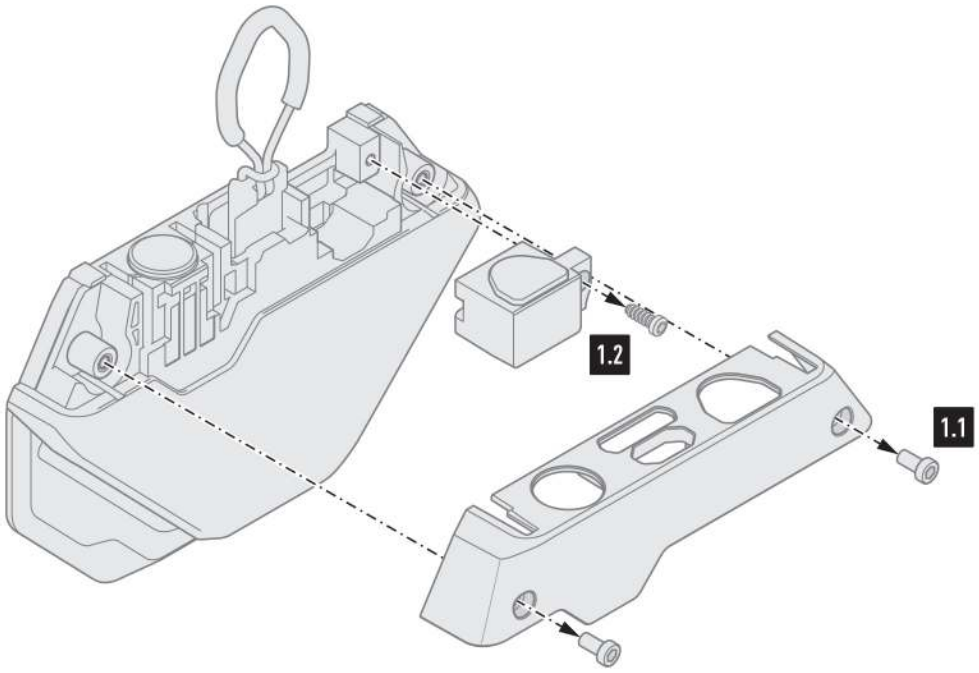

⚠ WARNING: Always wear eye and hand protection!
⚠ WARNING: Always use suitable tools!


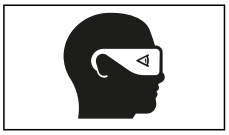
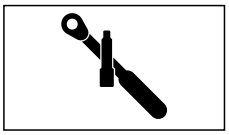
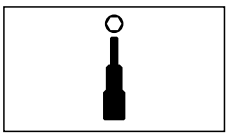
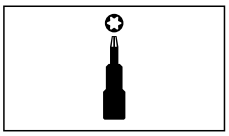

Dismantling the installed locking unit

1.1 - Loosen the two screws and remove the cover of the V-LOC connector.

1.2 - Loosen the screw and remove the lock housing from the V-LOC connector.

The content translation is automated.
© SW-MOTECH GmbH & Co. KG

Errors and omissions excepted
Subject to technical and design changes.

2

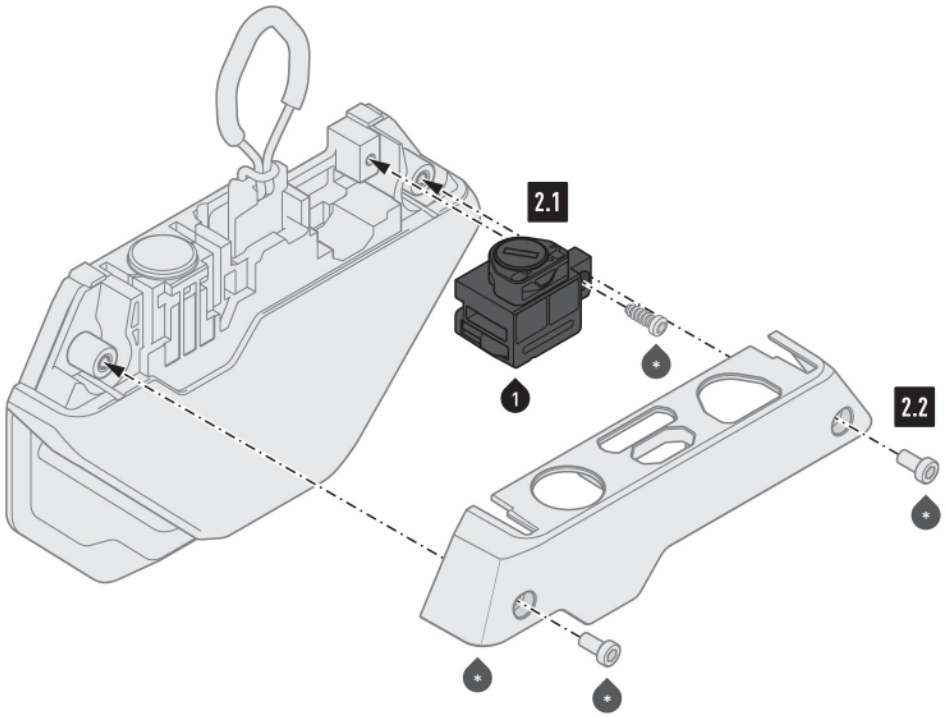

Mounting the locking unit

2.1 - Screw the lock housing (1) to the V-LOC connector using the screw (•). Carefully tighten the screw (•) by hand.
⚠ WARNING: Over-tightening the screw may damage plastic components!

2.2 - Screw on the cover of the V-LOC connector.
⚠ WARNING: Use liquid threadlocker!
Tighten the screws (•) as follows: **2 Nm**.
⚠ WARNING: Over-tightening the screw may damage plastic components!

Finally, check all functions of the locking mechanism to ensure proper operation.

Maintaining the lock cylinder

Use only graphite powder as a lubricant!





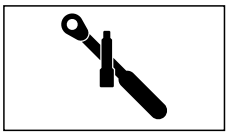

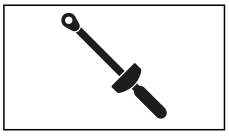

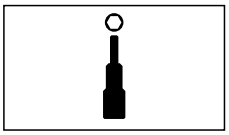

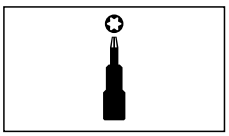

The content translation is automated.
© SW-MOTECH GmbH & Co. KG

Errors and omissions excepted
Subject to technical and design changes.

PRODUCT-SPECIFIC NOTES

⚠ ***NOTE*** :*Observe the country-specific regulations for the registration/operation of your vehicle and any applicable TÜV regulations. Have any parts requiring registration entered into your vehicle documents by your inspection centre after they have been installed.*

The content translation is automated.
© SW-MOTECH GmbH & Co. KG

Errors and omissions excepted
Subject to technical and design changes.